NOTES: (UNLESS OTHERWISE SPECIFIED)

1. SPECIFICATIONS AND DOCUMENTS:
   1.1. PANEL CONSTRUCTION SHALL BE IAW OH-SPEC-001.
   1.2. ELECTRICAL CONNECTIONS SHALL BE IAW OH-INTERCONNECT.

2. ALL ITEMS NOT EXPLICITLY DEFINED IN THIS DRAWING ARE DEFINED BY THE MASTER CAD MODELS. ALL DIMENSIONS NOT DEFINED ON THIS DRAWING ARE CONTAINED WITHIN THE FOLLOWING INTERMEDIATE FILES:
   2.1. FLAT PARTS: <MATERIAL>_<MATERIAL COLOR, IF APPLICABLE>_ <THICKNESS, IN DECIMAL INCHES>_<PN>_ <REV>.<VERSION NUMBER OF MODEL>.DXF
   2.2. FDM 3D PRINTED PARTS: FDM_<PN>_<REV>.<VERSION # OF MODEL>.STL
   2.3. RESIN 3D PRINTED PARTS: RESIN_<PN>_<REV>.<VERSION # OF MODEL>.STL
   2.4. MACHINED OR BENT PARTS: <PN>_<REV>.<VERSION # OF MODEL>.STEP

REVISION HISTORY			
REV	DESCRIPTION	DATE	APPROVED
-	INITIAL RELEASE	9/25/2022	
A	-106 MAKE FROM WAS: 9056K64; IS: 9056K62	4/27/26	

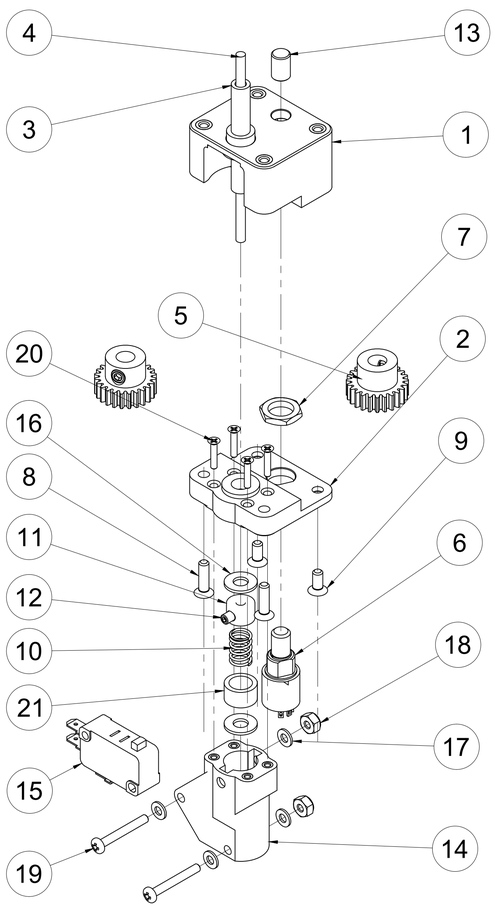

PART OF FN 6

-100 ASSY
SCALE 1:1

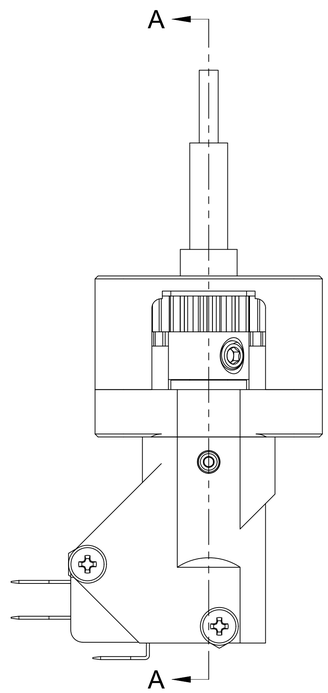

-100 FRONT
SCALE 2:1

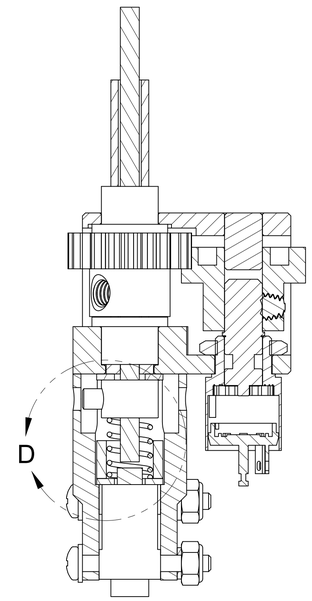

SECTION A-A
SCALE 2:1

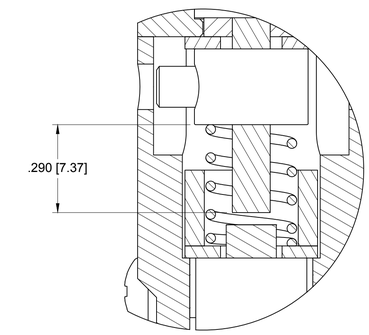

DETAIL D
SCALE 4:1

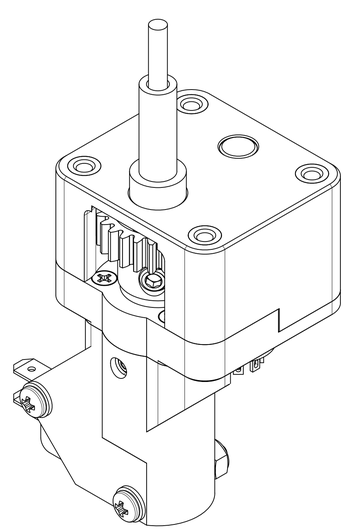

-100 ISO
SCALE 2:1

ITEM	QTY	PART NUMBER	DESCRIPTION	MATERIAL
21	1	OH4A3A1-108	SPRING CENTERING SLEEVE	PETG
20	4	96640A298	FHS, 100DEG, #2-56 X .4375, 18-8, BLK	SS
19	2	91249A120	PHS, #4-40 X .875, 18-8, BLK	SS
18	2	91831A005	NUT, NYLOC, #4-40, 18-8	SS
17	4	90618A200	WASHER, #4 X .250, 18-8, BLACK OXIDE, MS15795-803B	SS
16	2	92141A011	WASHER, #10 X .438 OD, 18-8	SS
15	1	7779K61	SWITCH, LIMIT, MINIATURE, SNAP-ACTION	N/A
14	1	OH4A3A1-103A	PRE-ASSY, SELECT JETT SWITCH BRACKET	----
13	1	OH4A3A1-107	ALIGNING SHAFT, 0.25 OD, 0.375 LG	STL
12	1	92311A144	SET SCREW, #6-32 X 0.25, CUP POINT, 18-8	SS
11	1	9414T3	SHAFT COLLAR, .125 ID X 0.375 OD X .25 THK	STL
10	1	9657K247	SPRING, COMPRESSION, 0.30 OD X 0.440 L	STL
9	2	90471A210	FHS, 100DEG, #6-32 X .3125, STEEL	STL
8	2	90471A220	FHS, 100DEG, #6-32 X .500, STEEL	STL
7	1	50K NUT	HEX NUT FOR SWITCH, .375-32 UNEF	BRS
6	1	50KS45-01-1-05N	SWITCH, ROTARY, 45 DEG, 5 POS, .25 FLAT SHAFT	N/A
5	2	2303-0250-0024	GEAR, PINION, .250 BORE, 24T, MOD 0.8, STL, SERVOCITY	STL
4	1	OH4A3A1-106	PUSH SHAFT, 0.125 OD	ALU
3	1	OH4A3A1-105	ROTATING SHAFT, 0.25 OD, 0.15 ID	ALU
2	1	OH4A3A1-102A	PRE-ASSY, SELECT JETT LOWER MOUNT PLATE	----
1	1	OH4A3A1-101A	PRE-ASSY, SELECT JETT UPPER BRACKET	----

PARTS LIST

UNLESS OTHERWISE SPECIFIED:

DIMENSIONS ARE IN INCHES.

DUAL DIMENSIONS ARE IN MILIMETERS AND ENCLOSED IN SQUARE BRACKETS.

INTERPRET DRAWING IAW ASME Y14.100-2017.

INTERPRET DIM AND TOL IAW ASME Y14.5-2009.

REMOVE ALL BURRS AND SHARP EDGES TO .05 MAX.

DIMENSIONS APPLY BEFORE FINISH.

UOS INCH TOLERANCES ARE:

DECIMALS:
.X ± .1
.XX ± .03
.XXX ± .010

ANGLES:
MACHINED ± .5°
LOCATING ± .5°
FORMED ± 2°
CHAMFERS ± 5°

DRILLED HOLE DIAMETERS:
.0135 - .125: +.004/-.001
.126 - .250: +.005/-.001
.251 - .500: +.006/-.001
.501 - .750: +.008/-.001
.751 - 1.000: +.010/-.001
1.001 - 2.000: +.012/-.001

OPEN HORNET
https://www.OpenHornet.com

TITLE
ASSY, SELECT JETT SWITCH MECH

LEFT CONSOLE

DESIGNED	Erik Scott	9/24/2022
CHECKED	J. STEENSEN	9/25/2022
DRAWN	Erik Scott	9/24/2022

CC BY NC SA

SIZE D | DWG NO OH4A3A1-100 | REV A

SCALE 2:1 | SHEET 1/5

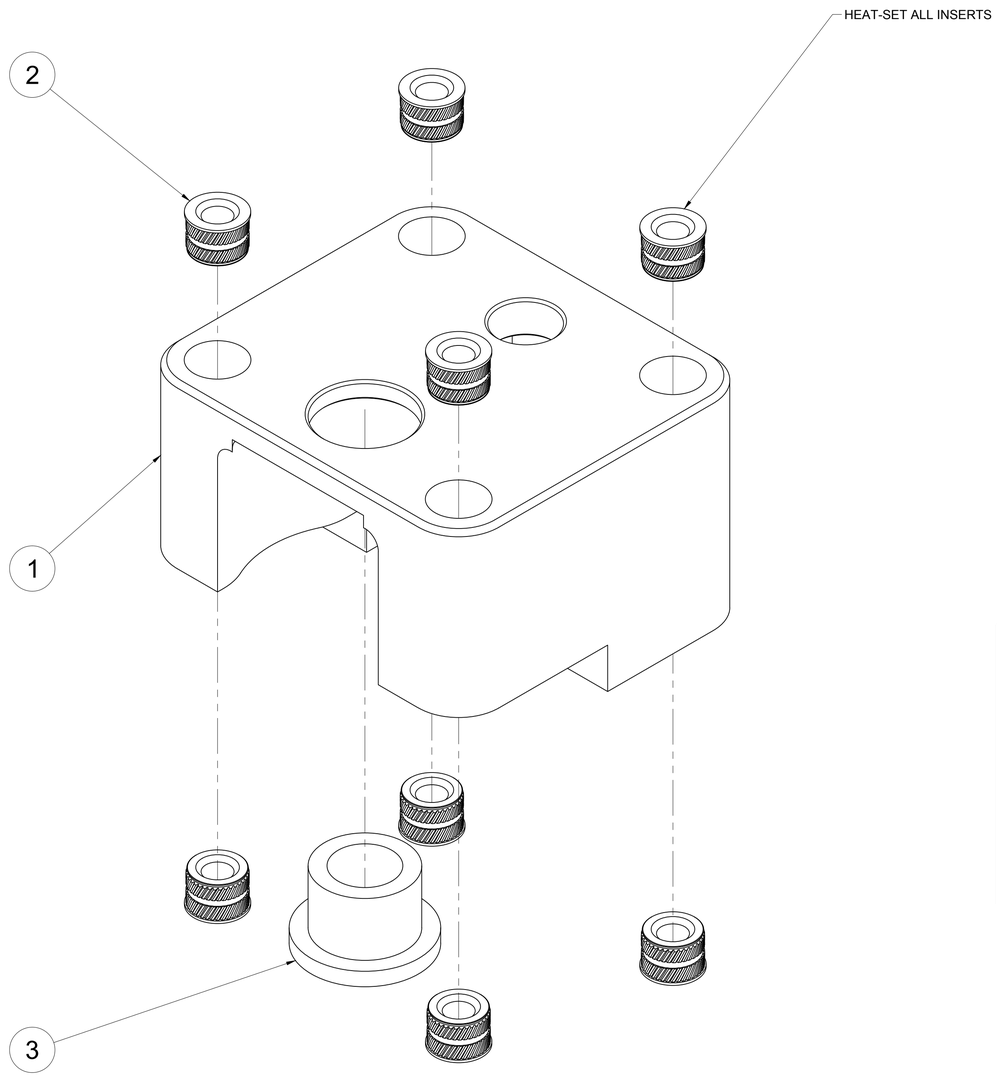

-101A ASSY
SCALE 4:1

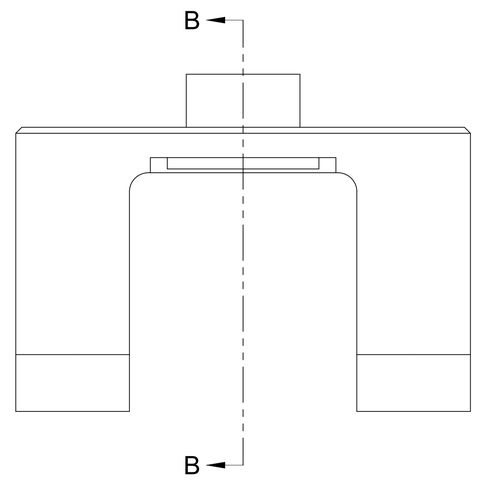

-101A ASSY
SCALE 4:1

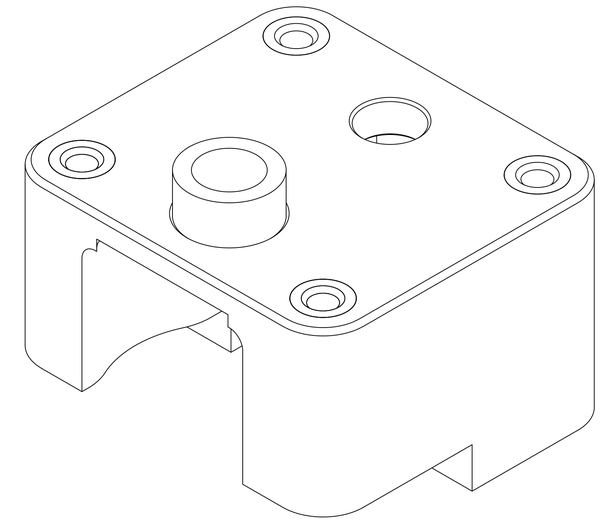

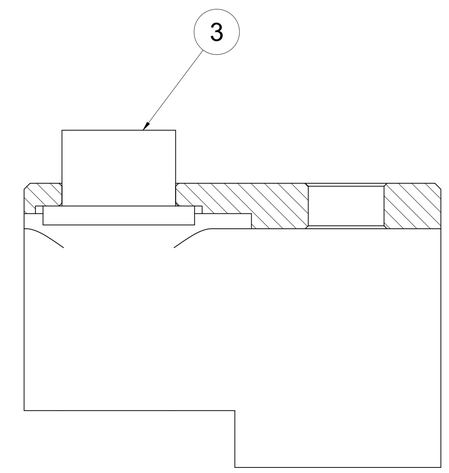

SECTION B-B
SCALE 4:1

ITEM	QTY	PART NUMBER	DESCRIPTION	MATERIAL
3	1	6389K231	BEARING, SLEEVED, FLANGED, .375 OD X .25 ID X .3125 H, .50 X .0625 FLANGE, NYLON	NYL
2	8	93365A130	INSERT, 6-32, BRASS, FOR PLASTIC	BRS
1	1	OH4A3A1-101	SELECT JETT UPPER BRACKET 3DP	PETG

PARTS LIST

OPEN HORNET
https://www.OpenHornet.com

BY NC SA

SIZE	DWG NO	REV
D	OH4A3A1-100	REV
SCALE 5:1		SHEET 2/5

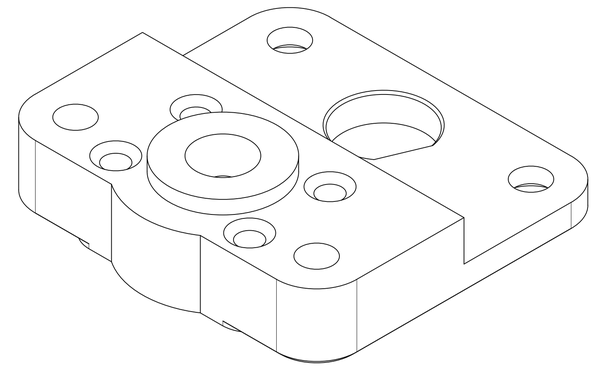

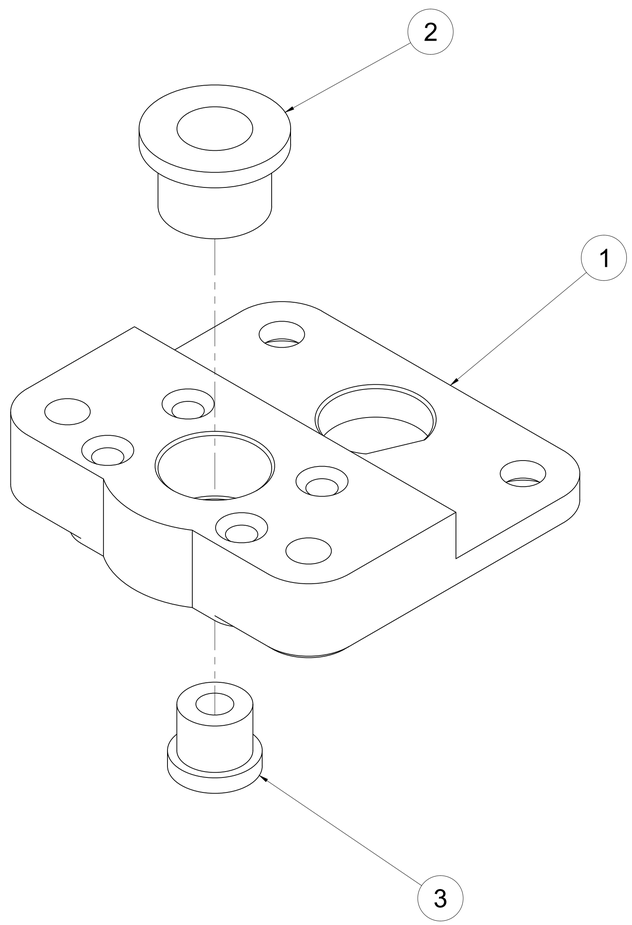

-102A ASSY
SCALE 4:1

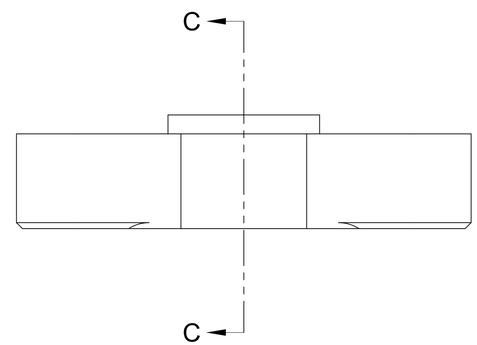

-102A ASSY
SCALE 4:1

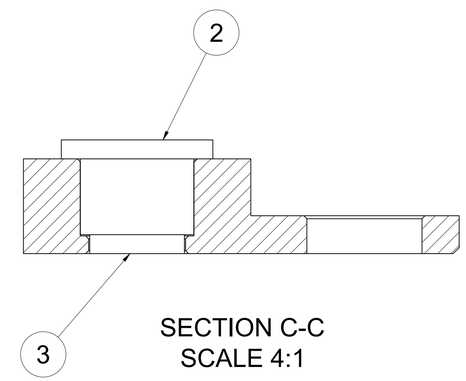

SECTION C-C
SCALE 4:1

ITEM	QTY	PART NUMBER	DESCRIPTION	MATERIAL
3	1	6338K561	BEARING, SLEEVE, FLANGED, .125 ID X .25OD, .25 LG, BRONZE	BRONZE
2	1	6389K231	BEARING, SLEEVED, FLANGED, .375 OD X .25 ID X .3125 H, .50 X .0625 FLANGE, NYLON	NYL
1	1	OH4A3A1-102	SELECT JETT LOWER MOUNT PLATE 3DP	PETG

PARTS LIST

OPEN HORNET
https://www.OpenHornet.com

BY NC SA

SIZE	DWG NO	REV
D	OH4A3A1-100	REV
SCALE 4:1		SHEET 3/5

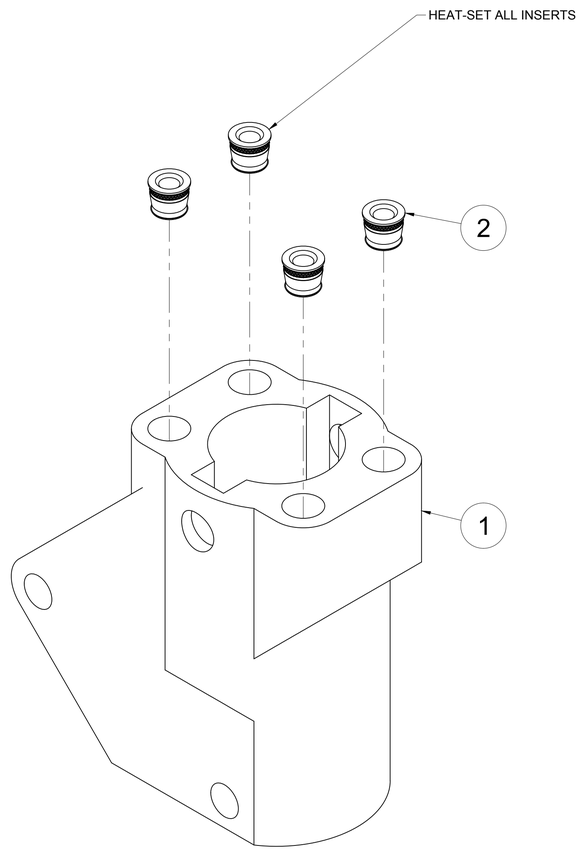

-103A ASSY
SCALE 4:1

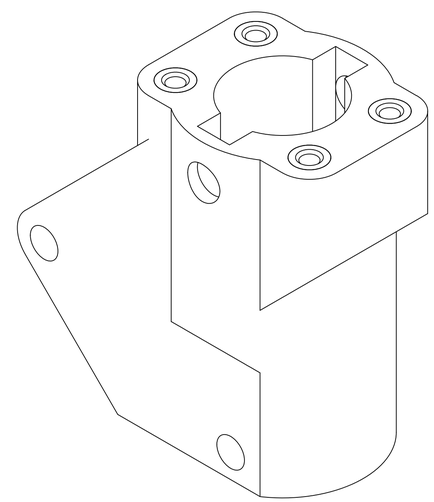

-103A ASSY
SCALE 4:1

ITEM	QTY	PART NUMBER	DESCRIPTION	MATERIAL
2	4	93365A110	INSERT, 2-56, BRASS, FOR PLASTIC	BRS
1	1	OH4A3A1-103	SELECT JETT SWITCH BRACKET	PETG

PARTS LIST

OPEN HORNET
https://www.OpenHornet.com

BY NC SA

SIZE D | DWG NO OH4A3A1-100 | REV REV

SCALE 4:1 | SHEET 4/5

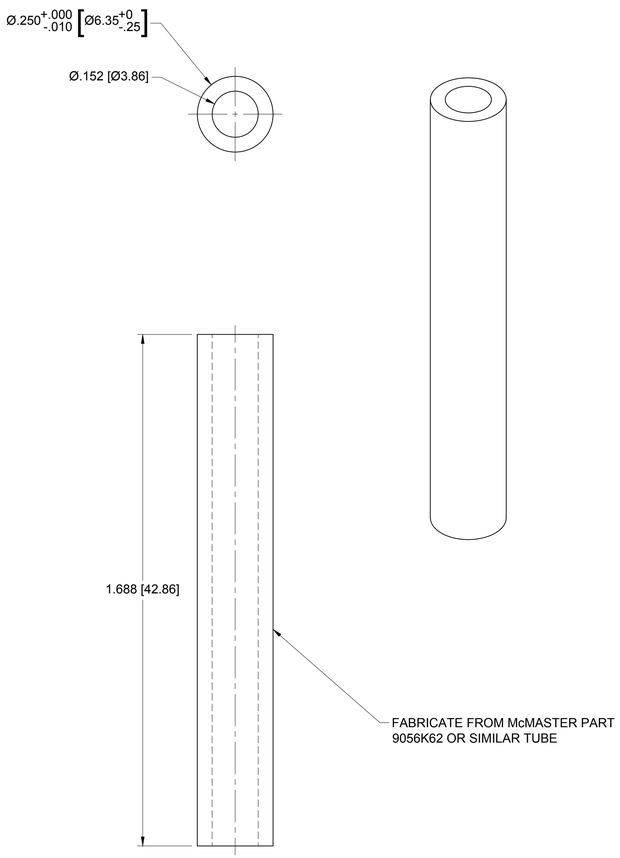

-105
SCALE 4:1

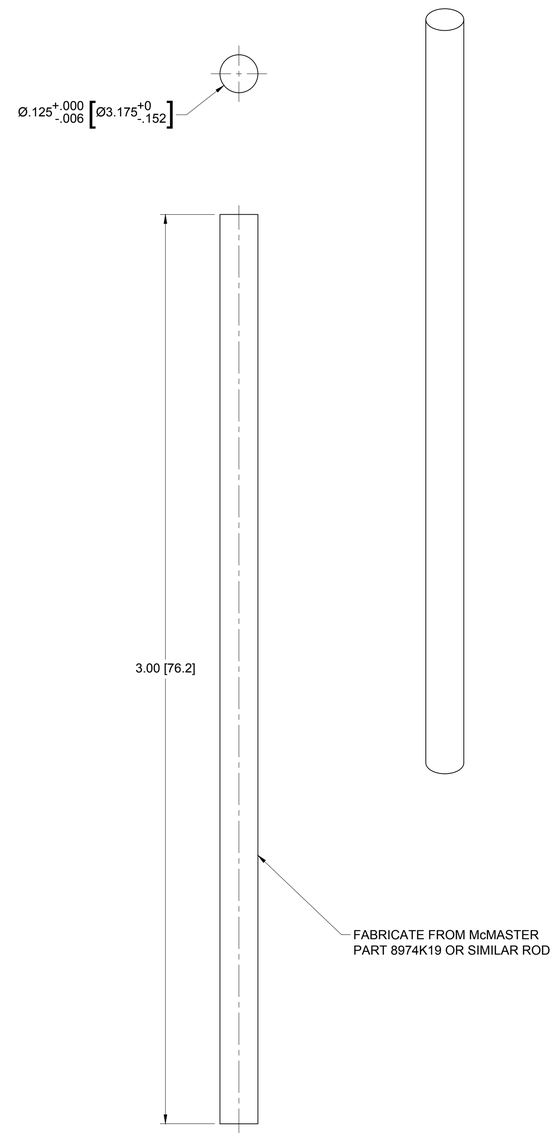

-106
SCALE 4:1

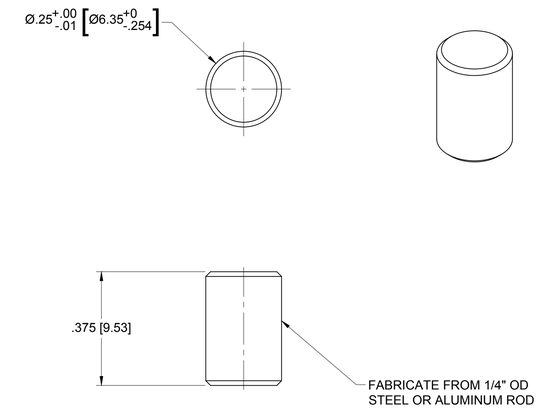

-107
SCALE 4:1

OPEN HORNET
https://www.OpenHornet.com

CC BY NC SA

SIZE	DWG NO	REV
D	OH4A3A1-100	REV
SCALE 4:1		SHEET 5/5